WUXI DRILLING TOOLS FACTORY

Department of International Trade

Add: No.8 Changyuan Road,HuiShan Economic Development,Wuxi City,Jiangsu Province,China

Tel: +86-510-83769831

Fax: +86-510-83769831

E-mail: info@drillingtoolschina.com

Web: www.drillingtoolschina.com

XZ® MASTER CORE

B/N/H/P WIRELINE CORE SYSTEM

WUXI DRILLING TOOLS FACTORY

The explanation,diagram and technical parameter are varying with cintinuous technology development without further notice.

TABLE OF CONTENTS

ABOUT OUR COMPANY 01-02

ABOUT OUR SERVICES 03-04

ABOUT OUR PRODUCTS 05-07

FROM MATERIAL TO FINISHED PRODUCT 08-10

- Core barrel assembly and overshot assembly
- Diamond products
- Drill rod and casing
- Other accessories

CORE BARREL AND OVERSHOT ASSEMBLY 11-21

- B Core barrel
- B Overshot assembly
- N Core barrel
- N Overshot assembly
- H Core barrel
- H Overshot assembly
- P Core barrel
- P Overshot assembly
- S75-SF core barrel

DRILL ROD AND CASING 22-28

- B/N/H/P drill rod
- DCDMA casing
- Inner tube and outer tube

DIAMOND PRODUCTS 29-32

- Diamond bits
- Reaming shell

OTHER ACCESSORIES 33-38

- Adapter subs
- Hoist plug
- Circle wrenches

WORKING PROPOSAL 39-42

ABOUT OUR COMPANY

We are China Geological Core Drilling Tools Standard （GB） setter;

We have workshops which cover an area of **20 acres**;

We manufacture **more than 200,000** pieces of drill rod for our customers every year;

We have **more than 50 years** experience of manufacturing drilling tools in China;

Our products are widely used in **more than 30 countries**.

1960

1970

1980

2008

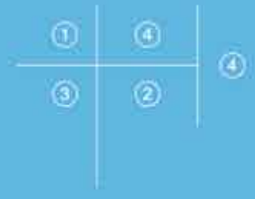

ABOUT OUR SERVICES

Our diamond core bits were used in China drilling skills contest

Our coring drill rod broke the deepest record in Shandong project in China（drill up to 3295m）

We provide our customers with the best aftermarket support

Our drilling tools were used for the forecast of geological disasters after Wenchuan earthquake in 2008

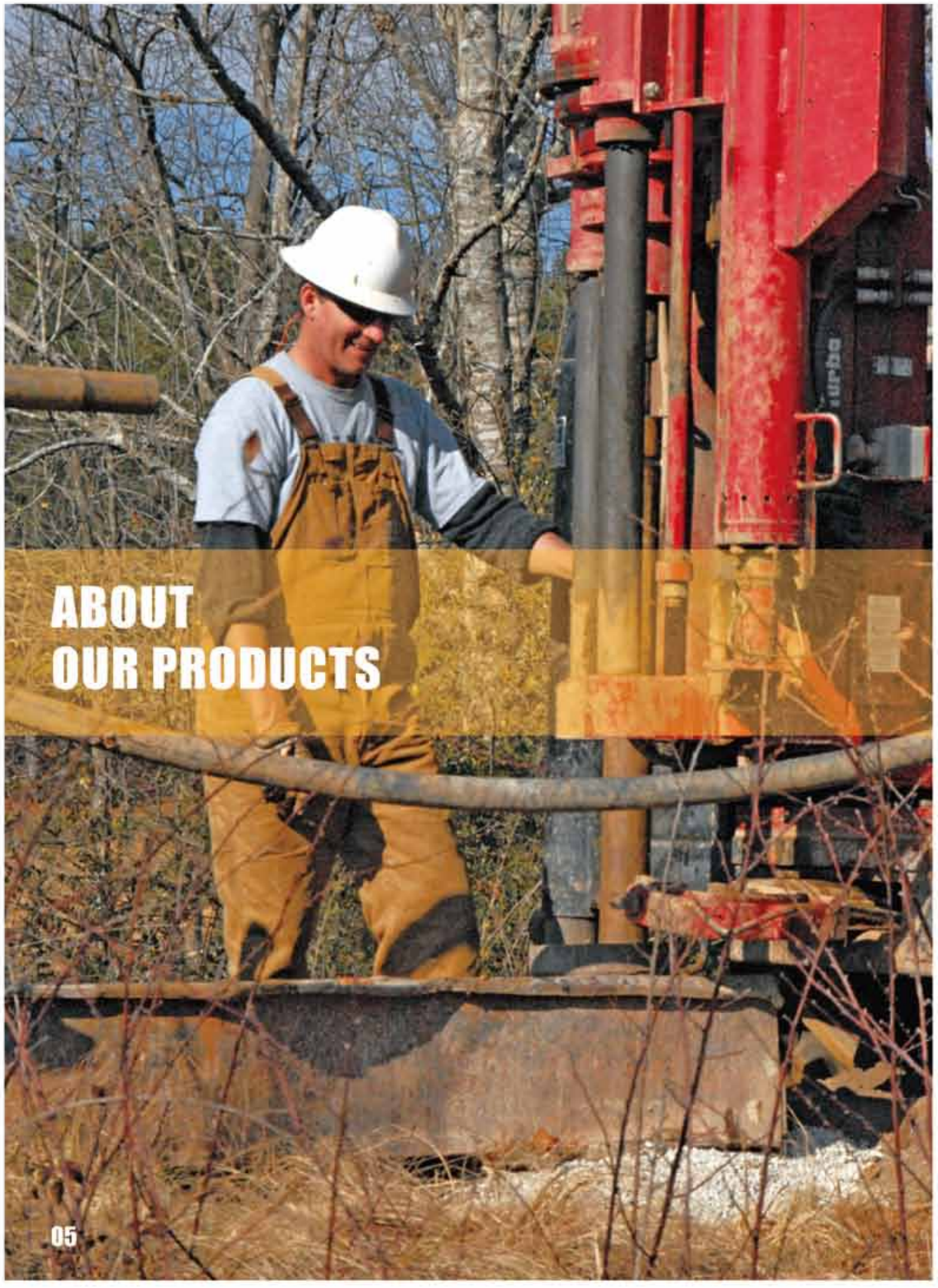

ABOUT OUR PRODUCTS

WIRELINE COMPONENTS

- Core barrel assembly
- Overshot assembly
- Water swivel and hoist plug
- Subs and adapters
- Wrenches

RODS AND CASINGS

- B/N/H/P drill rod
- DCDMA Drill rod
- Casings

DIAMOND PRODUCTS

- Surface set bits
- Impregnate bits
- Tungsten carbide bits
- Casing shoe bits
- Reaming shells

OTHER TOOLS

- Recovery tools

OVERSHOT ASSEMBLY

WIRELINE CORE BARREL ASSEMBLY

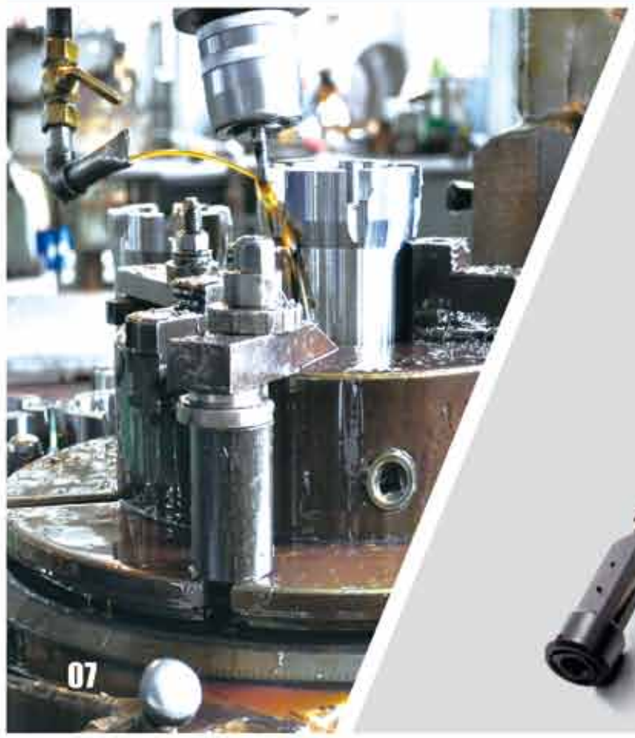

OUR DRILL ROD PRODUCTION

MASTER CORE possesses professional ability of diamond drill bits and reaming shells.Our drilling bits have first-class quality excellent performance.Bits and reaming shells are designed on basis of ground condition.In respect of drilling in speed and useful life， our products are the most competitive products in China.

OUR DRILL BITS PRODUCTION

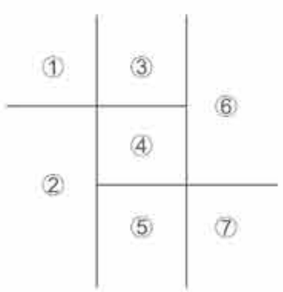

① Fill diamond into the mold

② Set polycrystalline chips into diamond bits and reaming shells

③ The wear of drill bits

④ Casing bits

⑤ Reaming shells

⑥ hot-pressing technology

⑦ Diamond bits

OTHER TOOLS

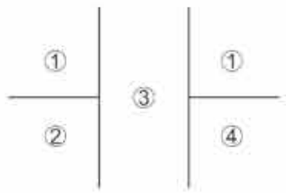

① Diamond circle wrenches

② Hoist plug

③ Diesel winch

④ Water swivel

CORE BARREL AND OVERSHOT ASSEMBLY

- BC ---------- size B Core barrel
- BO---------- size B Overshot assembly
- NC---------- size N Core barrel
- NO---------- size N Overshot assembly
- HC---------- size H Core barrel
- HO---------- size H Overshot assembly
- PC---------- size P Core barrel
- PO---------- size P Overshot assembly
- S75-SF------ size 75mm Super core barrel

B Core barrel

No	Code	Name	Qty1
1	BC-01	Locking coupling	1
2	BC-02	Spearhead point	1
3	BC-03	Spring pin	1
4	BC-04	Latch retracting case	1
5	BC-05	Link spring	1
6	BC-06	Spring pin	2
7	BC-07	Latch	1
8	BC-08	Spring pin	1
9	BC-09	Spring pin	1
10	BC-10	Spearhead base	1
11	BC-11	Adapter coupling	1
12	BC-12	Landing shoulder	1
13	BC-13	Landing ring	1
14	BC-14	Indicator bushing	1
15	BC-15	Upper latch body	1
16	BC-16	Hex nut	1
17	BC-17	Spindle	2
18	BC-18	Shut-off valve, hard	2
19	BC-19	Valve adjusting washer	1
20	BC-20	Hanger bearing	2
21	BC-21	Thrust bearing	1
22	BC-22	Spring	1
23	BC-23	Stover lock nut	1
24	BC-24	Grease fitting	1
25	BC-25	Inner-tube cap	1
26	BC-26	Stainless steel ball	1
27	BC-27	Seal seat	1
28	BC-28	Inner tube	1
29	BC-29	Outer tube	1
30	BC-30	Reaming shells	1
31	BC-31	Inner tube stabilizer	1
32	BC-32	Stop ring	1
33	BC-33	Core lifter	1
34	BC-34	Core lifter case	1
35	BC-35	Diamond bit	1

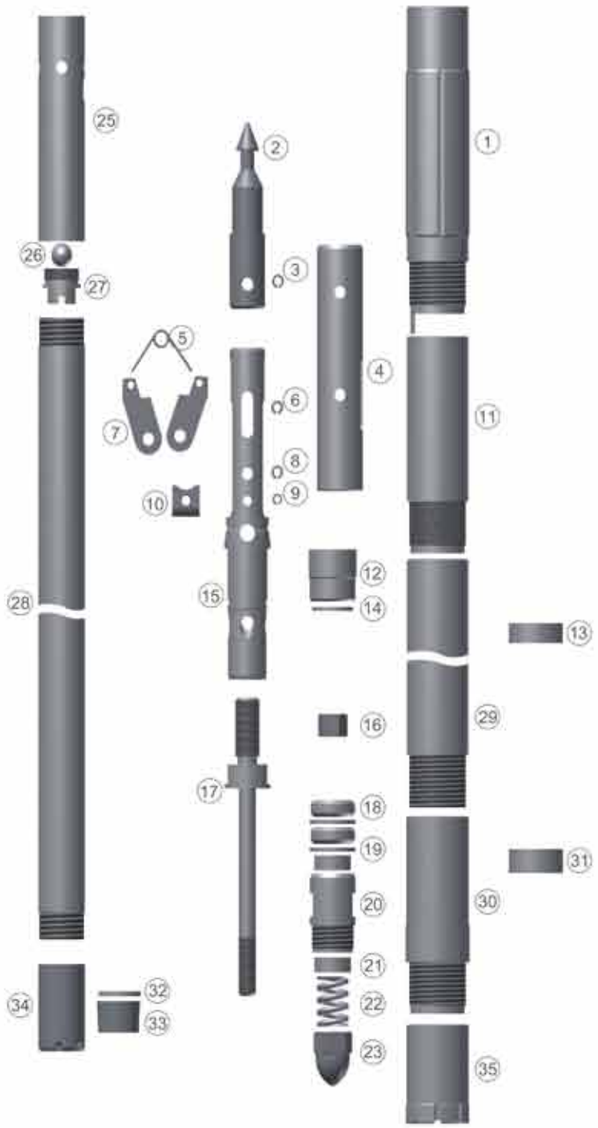

B Overshot assembly

No	Code	Name	Qty1
1	BO-01	Eye bolt	1
2	BO-02	Cable collar	1
3	BO-03	Bearing	1
4	BO-04	Nut M10	1
5	BO-05	Cotter pin3.2x20	1
6	BO-06	Cable swivel body	1
7	BO-07	Locking sleeve	1
8	BO-08	Jar bar	1
9	BO-09	Jar staff	1
10	BO-10	Nut 3/4-10 unc	1
11	BO-11	Spring base	1
12	BO-12	Spring	1
13	BO-13	Cap	1
14	BO-14	Overshot head	1
15	BO-15	Lock nut m10x12	1
16	BO-16	Spring	1
17	BO-17	Stainless ball φ9mm	2
18	BO-18	Lifting dog	2
19	BO-19	Spring	1
20	BO-20	M6 grease fitting	1
21	BO-21	Pinφ13x50	1
22	BO-22	Pinφ6x50	1

N Core barrel

No	Code	Name	Qty1
1	NC-01	Spearhead point	1
2	NC-02	Compression spring	1
3	NC-03	Detent plunger	1
4	NC-04	Spring pin7/16x1	1
5	NC-05	Spearhead base	1
6	NC-06	Latch retracting case	2
7	NC-07	Spring pin	1
8	NC-08	3/8 bolt	1
9	NC-09	Washer	1
10	NC-10	Latch compression spring	1
11	NC-11	Upper latch body	2
12	NC-12	Latch	2
13	NC-13	Link	1
14	NC-14	Spring pin	2
15	NC-15	Stainless steel ball	1
16	NC-16	Landing indicator bushing	1
17	NC-17	Landing shoulder	1
18	NC-18	Lower latch body	1
19	NC-19	Washer, nord-lock	1
20	24885	Hex nut	1
21	NC-21	Spindle	2
22	NC-22	Shut-off valve hard	2
23	NC-23	Valve adjusting washer	1
24	24312	Thrust bearing	1
25	NC-25	Spindle bearing	1
26	18298	Hanger bearing	1
27	NC-27	Compression spring	1
28	NC-28	Grease fitting	1
29	NC-29	Inner tube cap	1
30	NC-30	Check valve body	1
31	NC-31	Landing ring	1
32	NC-32	Stover lock nut	1
33	NC-33	Inner tube	1
34	NC-34	Core lifter case	1
35	NC-35	Core lifter	1
36	NC-36	Stop ring	1
37	NC-37	Locking coupling	1
38	NC-38	Adapter coupling	1
39	NC-39	Inner tube stabilizer	1
40	NC-40	Reaming shells	1
41	NC-41	Outer tube	1
42	NC-42	Diamond bit	1

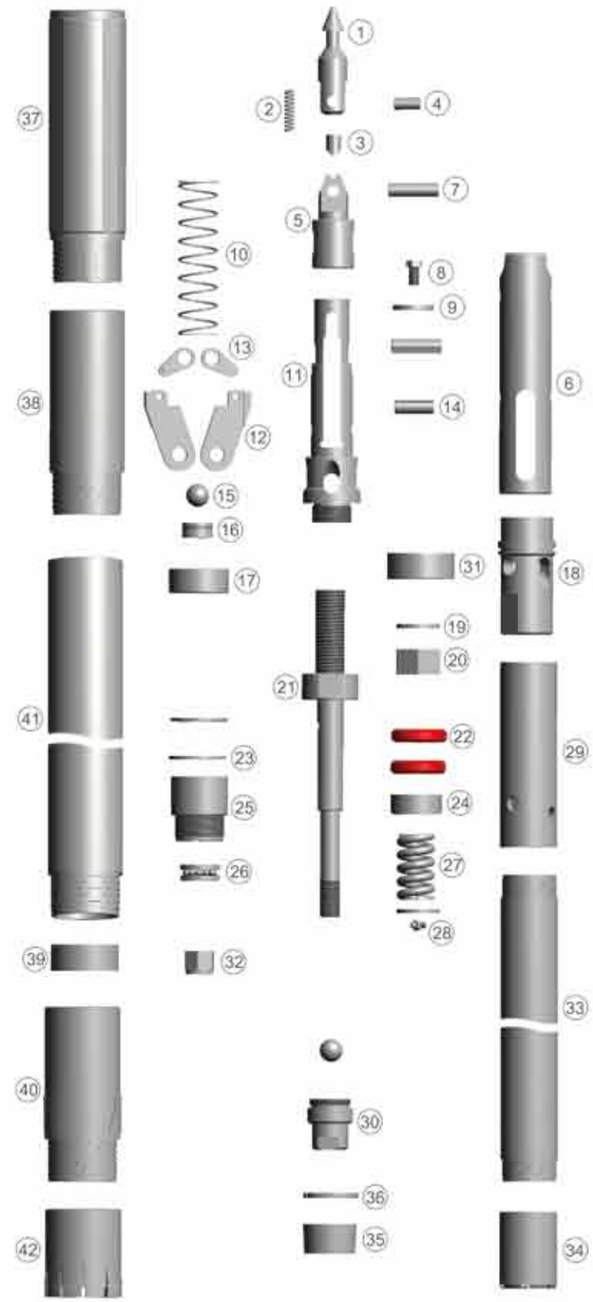

N Overshot assembly

No	Code	Name	Qty1
1	NO-01	Eye bolt	1
2	NO-02	Cable collar	1
3	NO-03	Bearing	1
4	NO-04	Nutm10	1
5	NO-05	Cotter pin3.2x20	1
6	NO-06	Cable swivel body	1
7	NO-07	Locking sleeve	1
8	NO-08	Jar bar	1
9	NO-09	Jar staff	1
10	NO-10	Nut 3/4-10 unc	1
11	NO-11	Spring base	1
12	NO-12	Spring	1
13	NO-13	Cap	1
14	NO-14	Overshot head	1
15	NO-15	Lock nut m10x12	1
16	NO-16	Spring	2
17	NO-17	Stainless ball φ9mm	2
18	NO-18	Lifting dog	1
19	NO-19	Spring	1
20	NO-20	M6 grease fitting	1
21	NO-21	Pinφ13x50	1
22	NO-22	Pinφ6x50	1

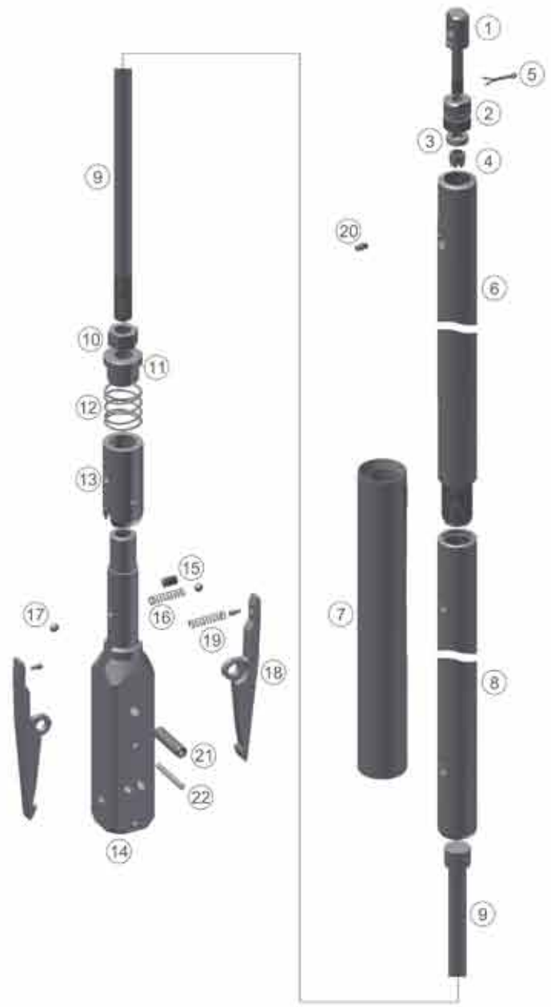

H Core barrel

No	Code	Name	Qty1
1	HC-01	Spearhead point	1
2	HC-02	Compression spring	1
3	HC-03	Detent plunger	1
4	HC-04	Spring pin 7/16x1	1
5	HC-05	Spearhead base	1
6	HC-06	Upper latch body	1
7	HC-07	Link	1
8	HC-08	Latch retracting case	2
9	HC-09	Spring pin	2
10	HC-10	Latch	1
11	HC-11	Spring pin	1
12	HC-12	Landing shoulder	1
13	HC-13	Lower latch body	1
14	HC-14	Hex nut	2
15	HC-15	Shut-off valve hard	2
16	HC-16	Valve adjusting washer	2
17	HC-17	Thrust bearing	1
18	HC-18	Spindle bearing	1
19	HC-19	Hanger bearing	1
20	HC-20	Compression spring	1
21	HC-21	Spindle	1
22	HC-22	Stover lock nut	1
23	HC-23	Grease fitting	2
24	HC-24	Stainless steel ball	1
25	HC-25	Inner-tube cap	1
26	HC-26	Check valve body	1
27	HC-27	Inner tube	1
28	HC-28	Core lifter	1
29	HC-29	Core lifter case	1
30	HC-30	Stop ring	1
31	HC-31	Impregnated bit	1
32	HC-32	Outer tube	1
33	HC-33	Landing ring	1
34	HC-34	Reaming shells	1
35	HC-35	Inner tube stabilizer	1
36	HC-36	Adapter coupling	1
37	HC-37	Locking coupling	1
38	HC-38	Landing indicator bushing	1

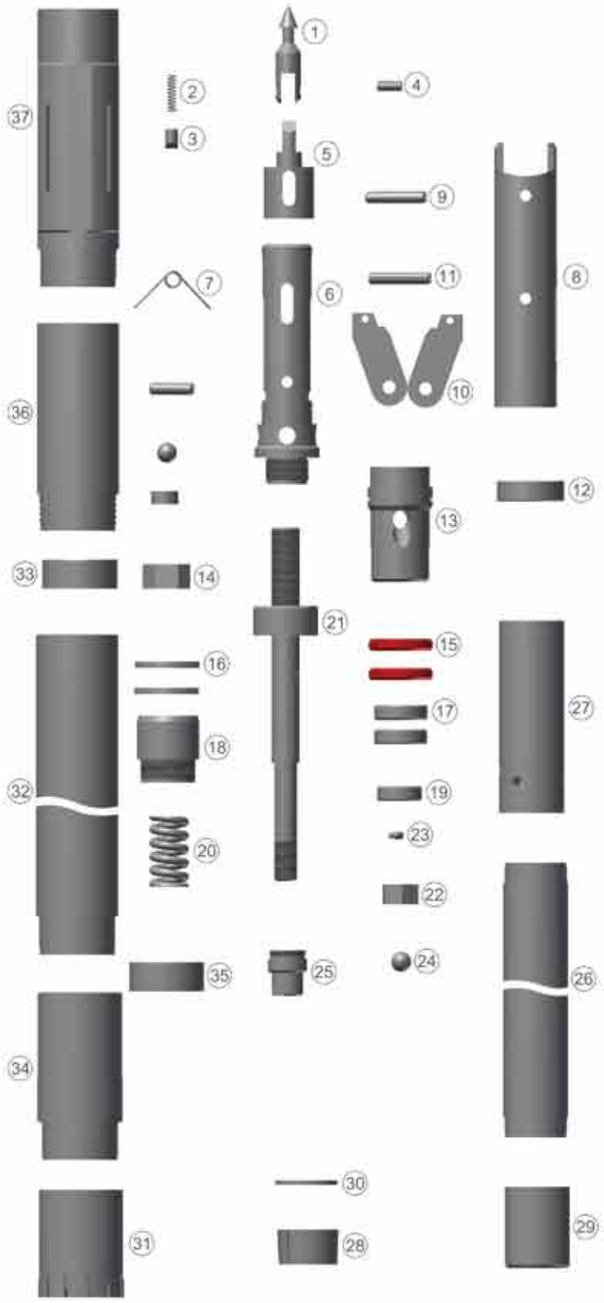

H Overshot assembly

No	Code	Name	Qty1
1	HO-01	Eye bolt	1
2	HO-02	Cable collar	1
3	HO-03	Bearing	1
4	HO-04	Nutm10	1
5	HO-05	Cotter pin3.2x20	1
6	HO-06	Cable swivel body	1
7	HO-07	Locking sleeve	1
8	HO-08	Jar bar	1
9	HO-09	Jar staff	1
10	HO-10	Nut 3/4-10 unc	1
11	HO-11	Spring base	1
12	HO-12	Spring	1
13	HO-13	Cap	1
14	HO-14	Overshot head	1
15	HO-15	Lock nut m10x12	1
16	HO-16	Spring	2
17	HO-17	Stainless ball φ9mm	2
18	HO-18	Lifting dog	1
19	HO-19	Spring	1
20	HO-20	M6 grease fitting	1
21	HO-21	Pinφ13x50	1
22	HO-22	Pinφ6x50	1

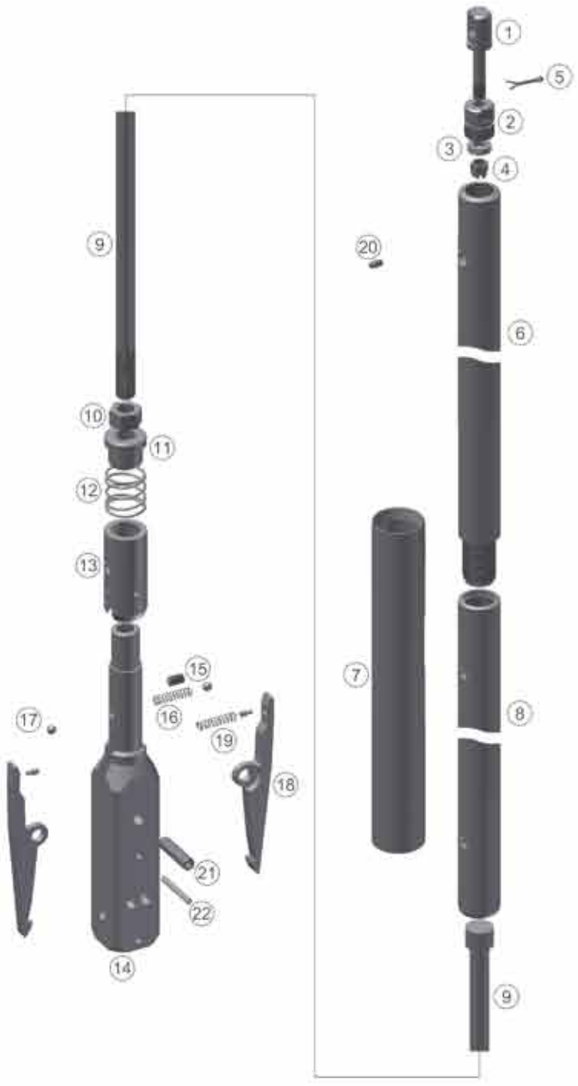

P Core barrel

No	Code	Name	Qty1
1	PC-01	Spearhead point	1
2	PC-02	Compression spring	1
3	PC-03	Spring pin	1
4	PC-04	Spring pin	1
5	PC-05	Spearhead base	1
6	PC-06	Latch retracting case	2
7	PC-07	Spring pin	1
8	PC-08	Self locking nut	1
9	PC-09	Washer	1
10	PC-10	Latch compression spring	1
11	PC-11	Upper latch body	2
12	PC-12	Link	2
13	PC-13	Latch	1
14	PC-14	Spring pin	1
15	PC-15	Landing shoulder	1
16	PC-16	Lower latch body	1
17	PC-17	Stainless steel ball	1
18	PC-18	Landing indicator bushing	1
19	PC-19	Nut，hex，1/4-20unc	1
20	PC-20	Spindle hollow	2
21	PC-21	Shut-off valve hard	2
22	PC-22	Valve adjusting washer	1
23	PC-23	Washer, tapered	1
24	PC-24	Thrust bearing	1
25	PC-25	Spindle bearing	1
26	PC-26	Thrust bearing	1
27	PC-27	Compression spring	1
28	PC-28	Self locking nut	1
29	PC-29	Inner-tube cap	1
30	PC-30	M 6 grease fitting	1
31	PC-31	Stainless steel ball	1
32	PC-32	Inner tube cap	1
33	PC-33	Inner tube	1
34	PC-34	Stop ring	1
35	PC-35	Core lifter	1
36	PC-36	Core lifter case	1
37	PC-37	Locking coupling	1
38	PC-38	Adapter coupling	1
39	PC-39	Landing ring	1
40	PC-40	Outer tube	1
41	PC-41	Inner tube stabilizer	1
42	PC-42	Reaming shell	1
43	PC-43	Impregnated bit	1

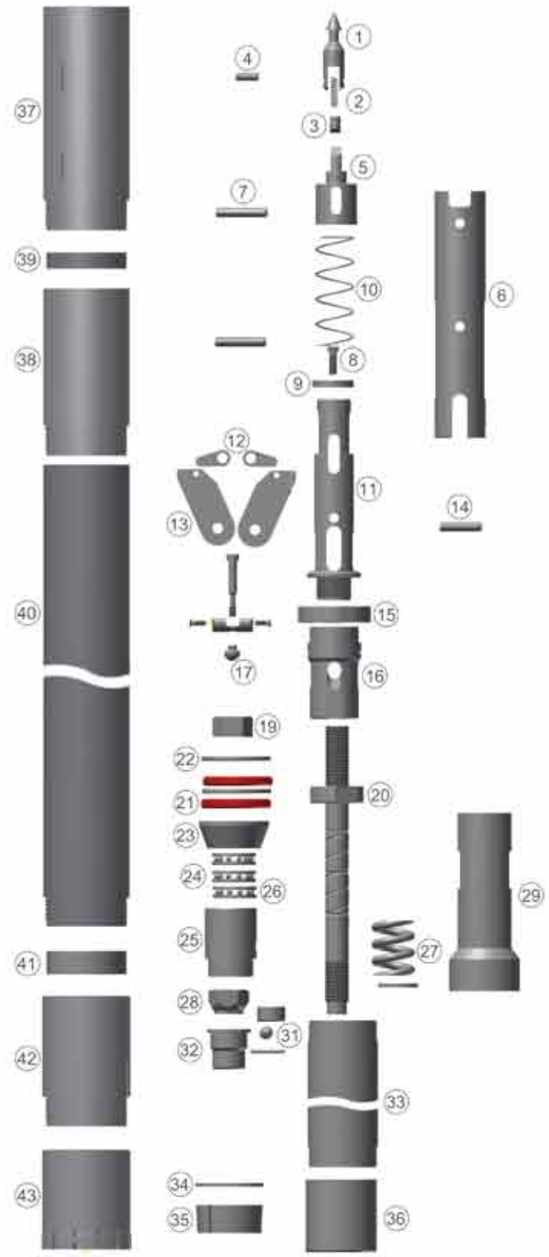

P Overshot assembly

No	Code	Name	Qty1
1	PO-01	Eye bolt	1
2	PO-02	Cable collar	1
3	PO-03	Bearing	1
4	PO-04	Nutm10	1
5	PO-05	Cotter pin3.2x20	1
6	PO-06	Cable swivel body	1
7	PO-07	Locking sleeve	1
8	PO-08	Jar bar	1
9	PO-09	Jar staff	1
10	PO-10	Nut 3/4-10 unc	1
11	PO-11	Spring base	1
12	PO-12	Spring	1
13	PO-13	Cap	1
14	PO-14	Overshot head	1
15	PO-15	Lock nut m10x12	1
16	PO-16	Spring	2
17	PO-17	Stainless ball φ9mm	2
18	PO-18	Lifting dog	1
19	PO-19	Spring	1
20	PO-20	M6 grease fitting	1
21	PO-21	Pinφ13x50	1
22	PO-22	Pinφ6x50	1
23	PO-23	Upper locking	1
24	PO-24	Stop ring	1
25	PO-25	Lower locking	1

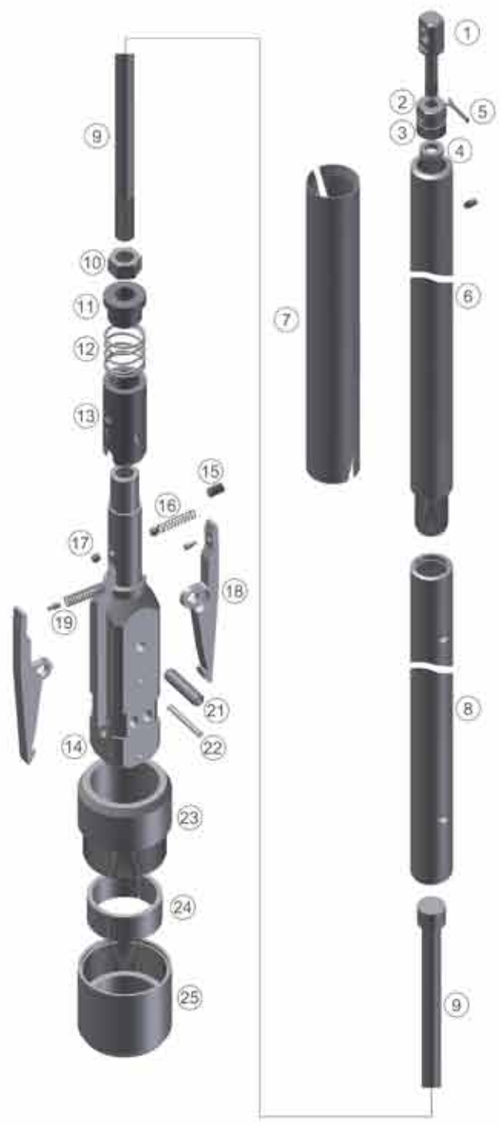

75mm Super core barrel

No	Code	Name	Qty1
1	S75-SF-01	Spearhead point	1
2	S75-SF-02	Spring pin	1
3	S75-SF-03	Compression spring	1
4	S75-SF-04	Locator	1
5	S75-SF-05	Spearhead base	1
6	S75-SF-06	Latch retracting case	1
7	S75-SF-07	Spring pin	1
8	S75-SF-08	Spring pin	1
9	S75-SF-09	Upper latch	2
10	S75-SF-10	Upper link	1
11	S75-SF-11	Spring pin	1
12	S75-SF-12	Spring pin	1
13	S75-SF-13	Spring pin	1
14	S75-SF-14	Upper latch base	1
15	S75-SF-15	Lower latch base	1
16	S75-SF-16	Lower latch	2
17	S75-SF-17	Lower link	1
18	S75-SF-18	Lower latch tube	1
19	S75-SF-19	Spring pin	1
20	S75-SF-20	Bearing cap	1
21	S75-SF-21	Thrust bearing	1
22	S75-SF-22	Bearing case	1
23	S75-SF-23	Hunger bearing	1
24	S75-SF-24	Compression spring	1
25	S75-SF-25	Locking nut	1
26	S75-SF-26	Inner tube cap	1
27	S75-SF-27	Hex nut	1
28	S75-SF-28	Upper adapter	1
29	S75-SF-29	Check valve body	1
30	S75-SF-30	Stover lock nut	1
31	S75-SF-31	Stainless ball	1
32	S75-SF-32	Lower adapter	1
33	S75-SF-33	Stop cap	1
34	S75-SF-34	Inner tube	1
35	S75-SF-35	Stop ring	1
36	S75-SF-36	Core lifter	1
37	S75-SF-37	Core lifter case	1
38	S75-SF-38	Locking coupling	1
39	S75-SF-39	Landing ring	1
40	S75-SF-40	Adapter coupling	1
41	S75-SF-41	Upper reamer	1
42	S75-SF-42	Outer tube	1
43	S75-SF-43	Inner tube stabilizer	1
44	S75-SF-44	Lower reamer	1
45	S75-SF-45	Diamond bit	1

2011 S75-SF DOUBLE LATCH TECHNOLOGY

MASTER CORE is proud to introduce the latest innovation in underground coring products—the DOUBLE LATCH Head Assembly. This new patented design features two sets of latches as a replacement for the traditional link latch mechanism,which offer a convenient operation and most importantly: improves the security.

Convenient operation

S75-SF comprises upper adapter、safety ring and lower adapter. It uses card slot which matches upper adapter with lower adapter such that the inner tube can be easily removed from the inner tube assembly.

Moreover,it reduces the labor intensity and improves the work efficiency in terms of easy core-removing and fishing for dropping tube. In the process of operation, the safety ring locking upper adapter and lower adapter , which makes sure the high level of operating security.

Drill deeper with CNHT capability

The new double latch underground head assembly are equipped with our MASTER CORE's advanced CNHT coring rods,for the first time ever ,drillers are able to take advantage of significantly high strength CNHT coring rod in underground applications and thus leading to deeper drilling capacity.

S75-SF specification of double latch drilling tools

Type	Diamond bitOD/ID(mm)	Outer tubeOD/ID(mm)	Inner tubeOD/ID(mm)	Core length(mm)
S75-SF	75/49	73/63	54/49	3000

Specification of CNHT coring rod

Type	Material	OD/ID(mm)	Drilling depth	Thread angle	Diameter of thicken end
CNHT	42CrMo	71/61	3000m	-10°/45°	74mm/58mm

Rods And Casign

INNER TUBES

OUTER TUBES

RODS

CASINGS

RODS

B/N/H/P series wireline core barrel designed by WUXI DRILLING TOOLS FACTORY, MASTER CORE is our brand, introduces advanced technology.MASTER CORE values innovation as well as interchangeability. Our products have independent intellectual property rights and fulfill geological exploration needs.Variety of products satisfies different drill depths and diameters.

Our B/N/H/P drill rod have good performance at accuracy and mechanism.their structure match with international standard in application of less than 1000-meter drilling.wireline rods are made of strong and ductile alloy steel pipes which whole piece processed.thread of drill rod is strengthened.

Based on the drilling depth of actual condition,drill rods are divided into A and B grades,Which have different performances and prices,If there are no special requirements,grade A products will be default products.

B/N/H/P Wireline Rod Grades

Grade	Performence	Material	Heat treatment
A	standard	30CrMnSiA	Whole pipe thermal processed
B	premium	ZT850(42CrMo)	Whole pipe thermal processed

Mechanical Properties Of Drill Rod

Steel Grade	Tensile Strength(MPa)	Yield Strength(MPa)	Elongation(%)	Impact Energy(AKV)
30CrMnSiA	≥950	≥840	≥10	40-44(10*10mm)
42CrMo	≥1050	≥900	≥12	60-80(10*10mm)

Thread Parameters

Type		BC	NC	HC	PC	CNHT
Thread length		44.45mm	44.45mm	44.45mm	63.5mm	50mm
Thread pitch/inch		3	3	3	2.5	3.175
Tooth height	box	0.76mm	0.76mm	0.76mm	1.17mm	1.1mm
	pin	0.88mm	0.88mm	0.88mm	1.27mm	1.2mm
Tooth angle		29°	29°	29°	29°	-10°/45°
Tensile resistance	A	450KN	540KN	550KN	600KN	.....
	B	500KN	620KN	640KN	680KN	670KN

Recommended Depth For Drill Rod

Outer Diameter/ inner diameter	Type	Recommended drilling depth	
		A	B
55.6mm/46mm	BC	2000	2200
70.1mm/60mm	NC	1500	1700
88.9mm/77.8mm	HC	900	1200
114.3mm/101.6mm	PC	600	800
71mm/61mm	CNHT	.....	3000

Parameter Wireline Coring System

Type	BC	NC	HC	PC
O.D of bit	59.5mm	74.6mm	95.6mm	122mm
I.D of bit	36.5mm	47.6mm	63.5mm	85mm
OD of reaming shell	60mm	75.8mm	96mm	122.6mm
OD of outer tube	57.2mm	73mm	92.1mm	117.5mm
ID of outer tube	46mm	60.3mm	77.8mm	103.2mm
OD of inner tube	42.9mm	55.6mm	73mm	95.3mm
ID of inner tube	38.1mm	50mm	66.7mm	88.9mm
OD of drill rod	55.6mm	70.1mm	89mm	114.3mm
ID of drill rod	46mm	60.1mm	77.8mm	101.6mm

Parameter Of W Series Drill Rod

SIZE	THREAD	LENGTH	OUTER DIAMETER	INNER DIAMETER	WEIGHT
AW	3/inch	1500mm	44.5mm	34.14mm	17kg
AW	3/inch	3000mm	44.5mm	34.14mm	14kg
BW	3/inch	1500mm	54mm	44.45mm	9kg
BW	3/inch	3000mm	54mm	44.45mm	18kg
NW	3/inch	1500mm	66.9mm	57.15mm	11.5kg
NW	3/inch	3000mm	66.9mm	57.15mm	23kg
HW	3/inch	1500mm	88.9mm	77.8mm	17.5kg
HW	3/inch	3000mm	88.9mm	77.8mm	35kg

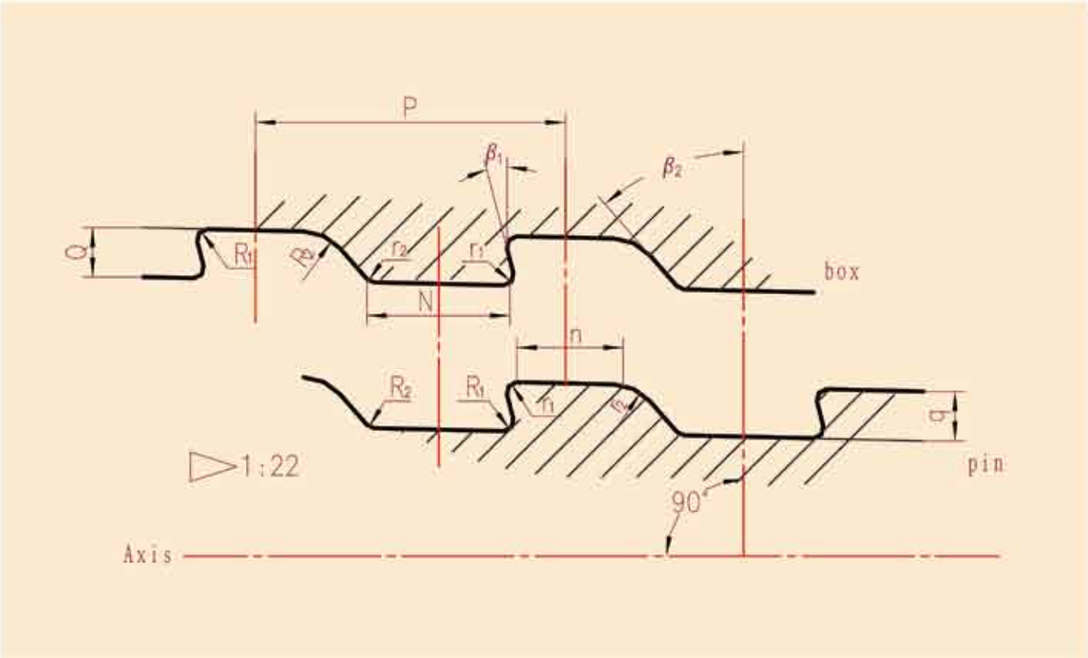

CODE		PARAMETERS	
		CNHT	CHHT(89mm)
N		3.547	3.547
n		3.465	3.465
Q		1.1	1.1
q		1.2	1.2
p		8	8
β_1		10°	10°
β_2		45°	45°
r_1	10°	0.2	0.2
r_1	45°	1.6	1.6
R_1	10°	0.1	0.1
R_2	45°	1.5	1.5
Taper		1:22	1:22

Package Specification By Iron Belts

Type	Length	Size（L*W*H）m	Qty/package	G.W/package
BC	1.5m/5ft	1.6*0.38*0.43	40	385
BC	3m/10ft	3.1*0.38*0.43	40	760
NC	1.5m/5ft	1.6*0.45*0.5	25	320
NC	3m/10ft	3.1*0.45*0.5	25	625
HC	1.5m/5ft	1.6*0.55*0.6	25	455
HC	3m/10ft	3.1*0.55*0.6	25	890
PC	1.5m/5ft	1.6*0.7*0.75	25	665
PC	3m/10ft	3.1*0.7*0.75	25	1315

Package Specification By Steel Belt

Type	Length	Size（L*W*H）m	Qty/package	G.W/package
BC	1.5m/5ft	1.6*0.4*0.4	37	345
BC	3m/10ft	3.1*0.4*0.4	37	670
NC	1.5m/5ft	1.6*0.5*0.5	37	460
NC	3m/10ft	3.1*0.5*0.5	37	900
HC	1.5m/5ft	1.6*0.65*0.65	37	660
HC	3m/10ft	3.1*0.55*0.6	37	1300
PC	1.5m/5ft	1.6*0.6*0.6	19	520
PC	3m/10ft	3.1*0.6*0.6	19	1000

Container Shipments

No	Length(m)	PCS/20 ft	PCS/40 ft
BC	1.5	2000	2600
BC	3	1000	1300
NC	1.5	1350	1900
NC	3	625	900
HC	1.5	925	1300
HC	3	400	625
PC	1.5	650	950
PC	3	300	450
CNHT	1.5	1200	1750
CNHT	3	600	825

Casings

In geological exploration, application of casing pipe is necessary. In wireline drilling tools working project, larger sized drill rods are usually selected as casings.But for economical consideration, using drill rods as casing is very quickly wear, so casing pipes are introduced as an alternative option. Our company recommended W series casing, which are reusable, effective and economical.Casings are made of high quality geological pipes, and they are connected tightly using pin and box thread .W series casings also have matched casing drive shoes.

Feathers of W series casing pipes are provided below:

W Series Casing Specification (DCDMA standard)

Type	O.D(mm)	I.D(mm)	Length of casing	Thread pitch(mm)	Thread length(mm)	Weight(kg/m)
BW	73	60.3	1.5m/3m/4.5m/6m	6.35	63.5	8.38
NW	88.9	76.2	1.5m/3m/4.5m/6m	6.35	69.85	12.3
HW	114.3	101.6	1.5m/3m/4.5m/6m	6.35	76.2	16.9
PW	139.7	127	1.5m/3m/4.5m/6m	8.47	82.55	20.8
HWT	114.3	101.6	1.5m/3m/4.5m/6m	8.47	62.84	16.9
PWT	139.7	127	1.5m/3m/4.5m/6m	8.47	62.84	20.8

Container Shipments

Type	Length(m)	Size(L*W*H)m	Qty/bundle	G.W/bundle
BW	1.5	1.6*0.48*0.53	25	320
BW	3	3.1*0.48*0.53	25	645
NW	1.5	1.6*0.55*0.60	25	470
NW	3	3.1*0.55*0.60	25	925
HW	1.5	1.6*0.70*0.75	25	455
HW	3	3.1*0.70*0.75	25	890
PW	1.5	1.6*0.80*0.85	25	665
PW	3	3.1*0.8*0.85	25	1315
HWT	1.5	1.6*0.70*0.75	25	455
HWT	3	3.1*0.70*0.75	25	890
PWT	1.5	1.6*0.80*0.85	25	665
PWT	3	3.1*0.8*0.85	25	1315

Remark: The normal length of casing is 1.5m and 3m

INNER TUBES AND OUTER TUBES

INNER TUBES

SIZE	OD(mm)	ID(mm)	LENGTH(mm)	
BC	42.9	38.1	1500	3000
NC	55.6	50	1500	3000
HC	73	66.7	1500	3000
PC	95.3	88.9	1500	3000
NC3/split tube	56/50.8	51/48.8	1500	3000

OUTER TUBES

SIZE	OD(mm)	ID(mm)	LENGTH(mm)	
BC	57.2	46	1500	3000
NC	73	60.3	1500	3000
HC	92.1	77.8	1500	3000
PC	117.5	103.2	1500	3000
NC3	73	63	1500	3000

DIAMOND PRODUCT

DIAMOND BITS

MASTER CORE possesses professional ability of diamond drill bits and reaming shells.Our drilling bits have first-class quality excellent performance.Bits and reaming shells are designed on basis of ground condition.In respect of drilling in speed and useful life，our products are the most competitive products in China.

Shapes of lips：flat-bottom，circular，serration，pointed teeth，angle teeth，ladder，and ladder with end spray.

Standard：To cooperate with drilling tools，bits are designed on basis of different stratum condition.our company also design and produce non-standard drilling bits according to customer's special requirements.

Recommendation：When hardness of stratum is high，low grade drilling bits are recommended to ensure matching of stratum.（please refer to the table below）

Notice：Outer diameter of drilling bit should be 0.5mm smaller than its matching reaming shell.

Hardness of stratum is a very important factor in selection of drilling bits.Appropriate choice of drilling bits will highly improve working efficiency and economical profit.

Serration

Ladder

Flat-bottom

Round Tooth

Pointed Teeth

Parameter of wireline coring diamond products

Type	BC	NC	HC	PC
O.D of bit	59.5mm	74.6mm	95.6mm	122mm
I.D of bit	36.5mm	47.6mm	63.5mm	85mm
OD of reaming shell	60mm	75.8mm	96mm	122.6mm

T,TT,T2&TB Series Metric Core Bits

SIZE	Outer Diameter		Inner Diameter	
	inch	mm	inch	mm
T36	1.422/1.412	36.12/35.87	0.859/0.849	21.82/21.57
TT46	1.818/1.808	46.18/45.92	1.394/1.384	35.40/35.15
T2-46	1.818/1.808	46.18/45.92	1.253/1.243	31.82/31.57
TB56	2.22	56.3	1.64	41.7
TT56	2.210/2.200	56.13/55.88	1.788/1.778	45.41/45.16
T2-56	2.210/2.200	56.13/55.88	1.647/1.637	41.83/41.58
T2-66	2.603/2.593	66.12/65.87	2.040/2.030	51.81/51.56
T2-76	2.997/2.987	76.12/75.87	2.434/2.424	61.82/61.57
T2-76coreline	2.997/2.987	76.12/75.87	2.288/2.278	58.12/57.87
T2-86	3.391/3.381	86.13/85.88	2.828/2.818	71.83/71.58
T2-86coreline	3.391/3.381	86.13/85.88	2.682/2.672	68.13/67.88
T2-101	3.981/3.971	101.12/100.8	3.300/3.290	83.82/83.57
T2-101coreline	3.981/3.971	101.12/100.8	3.155/3.145	80.13/79.88
T6-76	2.997/2.987	76.12/75.87	2.249/2.239	57.12/56.87
T6-86	3.391/3.381	86.13/85.88	2.643/2.633	67.13/66.88
T6-101	3.981/3.971	101.12/100.8	3.115/3.105	79.12/78.87
T6-116	4.575/4.560	116.20/115.8	3.667/3.657	93.14/92.89
T6-131	5.165/5.150	131.19/130.8	4.257/4.247	108.13/107
T6-146	5.755/5.740	146.18/145.8	4.847/4.837	123.11/122

Diamond Bit Choose Table

hardness		soft	Medium hard	Hard	Very hard
Name of rocks		Shale、mudstone、tuff、argillite、limestone	Sandstone、sandy shale、rashing、medium hard limestone、soft dolomite、hard shale	Serpentinite、marble、hard schist、limonite、diabase、hard sandstone	Gneiss、basalt、granite、rhyolite、ferrite、hornstone、quartzite
Hardness of rock		Soft → hard			
Abrasiveness		Weak----medium	Medium----------high	High------medium weak	Medium weak
MATRIX	HRC10-15				B10#
	HRC15-20				B9#
	HRC20-25			B8#	
	HRC25-30			B7#	
	HRC30-35			B6#	
	HRC35-40		B4#		
	HRC40-45		B2#		
	HRC45-50	B1#			
LIP	pointed tooth	Hard stratum			
	serration	Soft stratum			
	round tooth	Whole and hard stratum			
	flat bottom	Normally used in singled&double tube assembly			
	ladder	Declining stratum			
	end spray	Water soluble stratum			

Reaming Shell

Reaming shells are important parts of wireline core barrels.Their functions include reaming,stabilizing and maintaining the diameter of drilling hole.The recommended practice is to alternate two reaming shells in each hole drilled to maintain hole diameter.Upon bit changes，the reaming shell should be checked for wear with bit and shell wear gauge.Failure to observe these practices will result in either a poorly stabilized or an undersized hole that will require costly reaming.

Circle Wrenches

1. Outer Tube Circle Wrench

The outer tube is mainly used to manually screw and unscrew drill rods, outer and inner tubes and casing tubes. It is quite appropriate to be used in mine drilling field, and it is capable of improving drilling efficiency. It causes no harm to pipes. Its holding force is big and no skidding (slipping) will happen when using it.

Its main components include steel chain and slips.

2. Inner Tube Circle Wrench

The inner tube circle wrench is specially used to manually screw and unscrew inner tubes of double-pipe assembly in the field of mine drilling. It is safe to use, and capable of saving labor, and causing no harm to pipes. It is light in weight and large in gripping force. No slipping will happen.

3. Casing Tube Circle Wrench

The casing tube circle wrench is a kind of tool to screw and unscrew casing tubes in the double-pipe assembly. It's mainly composed of steel chain and alloy steel slips.

It can help to enhance the drilling efficiency and it is easy to utilize.

Technical Parameters

Product name	Specification
Casing tube circle wrench	BW
	NW
	HW
	PW
Diamond circle wrench (inner tube circle wrench)	BC
	NC
	HC
	PC
	NC3/HC3/PC3
Alloy free clamp (drill rod wrench) Outer tube circle wrench	BW
	NW
	HW
	PW
	BC
	NC
	HC
	PC
Pipe wrench	Φ42
	Φ43
	Φ50
	Φ60
	18"
	24"
	36"
	48"

NO	CODE	NAME	QTY
1	DCW-01	Melt	2
2	DCW-02	Melt washer	4
3	DCW-03	Locking board	1
4	DCW-04	Connection board	2
5	DCW-05	Handle	1

NO	CODE	NAME	QTY
1	CW-01	Rivet	3
2	CW-02	Nut	3
3	CW-03	Locking board	1
4	CW-04	Connection board	1
5	CW-05	Middle borad	1
6	CW-06	Handle	1
7	CW-07	Tungsten carbide	3

Drill Subs

The drill subs are mainly used to connect various drill rods (stems) in the geological drilling. These subs can be used to protect drill rod from consumption in the way of making the connector to bear most of torque force.

Technical Parameters

Serial number	Specification model	Unit	Unit weight
1	AW Rod Pin to NC Rod box	PCS	4KG
2	BW Rod Pin to NC Rod box	PCS	3.9KG
3	NC Rod Pin to NW Casing box	PCS	3.4KG
4	NW Rod pin to NC Rod box	PCS	3.4KG
5	NC Rod pin to BW Casing box	PCS	4.4KG
6	NC Rod pin to NW Casing box	PCS	4.4KG
7	NC Rod pin to HW Casing box	PCS	3.9KG
8	NC Rod pin to HWT Casing box	PCS	3.9KG
9	NC Rod pin to BW Rod box	PCS	3.3KG
10	NC Rod pin to NW Rod box	PCS	3.3KG

Remarks : We can make many kinds of sub connectors according to the requirements of clients worldwide

Hoisting Plug

The hoisting plug is mainly used to lift drill rods in the process of geological core drilling. And simple structure and reliable performance are its advantages.

It connects the hoisting line with drill rod so as to hang the drill rod joint or lock joint to lift the drill. It is mainly comprised of bail, roller bearing, and tool joint thread

NO	Code	Name	Qty
1	KT60-1	Lifting ring	1
2	KT60-2	Bearing base	1
3	KT60-3	Lifting base	1
4	KT60-4	Stop ring	1
5	KT30-5	Lifting head	1
6	GB/T 879.1	Pin	1
7	KT60-7	Bearing cap	1
8	51415	Bearing	1
9	KT60-9	Pin	1
10	M64 x 4	Nut	1

Water Swivel

The water swivel is mainly used in the geological exploration, and it is mainly comprised of high-pressure sealing ring, core tubes and spindle.

It is available with different threads and mountings, and capable of being used in supplying of high-pressure water, coolant, slurry etc.

We have Φ42 and Φ50 water swivels for clients worldwide, and they can work well in conjunction with various reducer unions of different drill rods.

Features

- High efficiency and long service lifespan are always available for this water swivel
- High-quality materials and thread treatment have been used in its manufacture.
- Its automatically adjustable sealing ring is capable of guaranteeing normal operation of water-supplying rod.
- Transverse device is equipped for it.
- It features compact frame and light weight.
- It is easy to work together with common tools.

Recovery Tools

The recovery tools is mainly used for salvaging drill rods (stems) and casing tubes, and it is capable of drilling and salvaging things from oil pipes, drill rods, milling tubes, packers, water distributor etc. Besides, it is especially appropriate for salvaging tube subjects with couplings.

Wireline winch performance parameters

Type of winchBC	1000m	1500m	2000m	3000m
Power	4KW	4.5KW	5.5KW	7KW
Max load	0.5T	0.6T	0.85T	1T
Length of cable	1000m	1500m	2000m	3000
Diameter of cable	5mm	5mm	6mm	6mm
Net Weight (Without diesel engine)	350kg	375kg	450kg	530kg

Thread grease

Our thread grease is suitable for casing,tubing and pipe line thread sealing and lubrication.the thread grease can protect the thread from erosion,most important is the thread grease make pin and box separate from each other easily.

WIRELINE CORE BARREL WORKING PROPOSAL

Here is a construction proposal for under 1000 meters drill.For reference only.

Drill machine					
No	Name	Type	QTY	Unit	Remark
1	Drill rig（diesel engine）	XY-4	1	set	-
2	Drilling tower	SGZ-13	1	set	-
3	Two wheels Bearing	XZ3030	1	set	-
4	Kelly bar	59*53*4.5m	1	pcs	-
5	Mud pump（diesel engine）	BW250	1	set	-
6	Diesel winch	1000m	1	set	-
7	High pressure rubber pipe	21m+7m	1	set	-
8	Water swivel	Φ50	1	set	-

1、Hole opening

Hole opening use PW series core barrel to drill 50-100m，put in PW series casing pipes.

No	Name	Type	QTY	Unit	Remark
1	0.5m core barrel	PW	1	PCS	-
2	1.5m core barrel	PW	1	PCS	-
3	3m core barrel	PW	1	PCS	-
4	Alloy bit	PW	2	PCS	-
5	Diamond bit	PW	2	PCS	-
6	PDC bit	PW	2	PCS	-
7	Casing	PW	50-100	meter	-
8	Casing shoe	PW	1	PCS	-
9	Casing wrench	PW	2	PCS	-
10	Casing clamp	PW	2	PCS	-

2、PC barrel working plan

Estimated depth：300m.put in NW casing （or use PC drilling rod as casing）

No	Name	Type	QTY	Unit	Remark
1	0.5m wireline rod	PC	1	PCS	-
2	1.5m wireline rod	PC	1	PCS	-
3	3m wireline rod	PC	330	METER	-
4	Core barrel	PC	2	SET	-
5	Overshot assembly	PC	1	SET	-
6	Diamond bit	PC	5	PCS	-
7	Reaming shell	PC	3	PCS	-
8	PDC bit	PC	2	PCS	-
9	Rod wrench	PC	2	PCS	-
10	Outer tube wrench	PC	2	PCS	-
11	Inner tube wrench	PC	2	PCS	-
12	Casing	HW	330	METER	-
13	Casing drive shoe	HW	2	PCS	-
14	Casing clamp	HW	2	PCS	-

3、HC barrel working plan

Estimated depth：600m.put in NW casing （or use HC drilling rod as casing）

No	Name	Type	QTY	Unit	Remark
1	3m wireline rod	HC	630	METER	-
2	Core barrel	HC	2	SET	-
3	Overshot assembly	HC	1	SET	-
4	Diamond bit	HC	5	PCS	-
5	Reaming shell	HC	3	PCS	-
6	Rod wrench	HC	4	PCS	-
7	Outer tube wrench	HC	2	PCS	-
8	Inner tube wrench	HC	2	PCS	-
9	Casing	NW	630	METER	-
10	Casing drive shoe	NW	1	PCS	-
11	Casing wrench	NW	2	PCS	-
12	Casing clamp	NW	2	PCS	-

4. NC barrel working plan

Estimated depth: to final end 1000m

No	Name	Type	QTY	Unit	Remark
1	3m wireline rod	NC	1050	METER	-
2	Core barrel	NC	2	SET	-
3	Overshot assembly	NC	1	SET	-
4	Diamond bit	NC	5	PCS	-
5	Reaming shell	NC	3	PCS	-
6	Rod wrench	NC	4	PCS	-
7	Outer tube wrench	NC	2	PCS	-
8	Inner tube wrench	NC	2	PCS	-
9	Casing	BW	-	METER	optional
10	Casing drive shoe	BW	-	PCS	optional
11	Casing wrench	BW	-	PCS	optional
12	Casing clamp	BW	-	PCS	optional

5. BC barrel working plan

If NC barrel cannot reach the end, put in BW series casing (or NC series rods) and use BC series barrel instead.

No	Name	Type	QTY	Unit	Remark
1	3m wireline rod	BC	1050	METER	-
2	Core barrel	BC	2	SET	-
3	Overshot assembly	BC	1	SET	-
4	Diamond bit	BC	-	PCS	Optional
5	Reaming shell	BC	-	PCS	-
6	Rod wrench	BC	-	PCS	-
7	Outer tube wrench	BC	-	PCS	-
8	Inner tube wrench	BC	-	PCS	-

6. Other equipments

Lifting tools

No	Name	Type	QTY	Unit	Remark
1	Hoisting plugs	65	12	SET	-
	Casing lifting adapter	PW/65	2	PCS	-
		HW/65	2	PCS	-
		NW/65	2	PCS	-
		BW/65	2	PCS	optional
2	Water swivel	50	2	SET	-
	Adapter sub	PC/50	1	PCS	-
		HC/50	2	PCS	-
		NC/50	2	PCS	-
		BC/50	2	PCS	optional
3	Adapter sub	PC/PW	1	PCS	-
		HC/HW	1	PCS	-
		NC/BW	1	PCS	-

Recovery tool

No	Name	Type	QTY	Unit	Remark
1	Recovery Taps	PW	1	SET	Adapter sub available
		PW(HC)	1	SET	
		HW(NC)	2	SET	
		NW(BC)	2	SET	

Thread oil

No	Name	Type	QTY	Unit	Remark
1	Thread Grease	5kg/pcs	10	-	5kg/pcs

spare part kit

No	Name	Type	QTY	Unit	Remark
1	Spare part kit	1000M	1	package	-